MODULAR PLASTER PRODUCTS

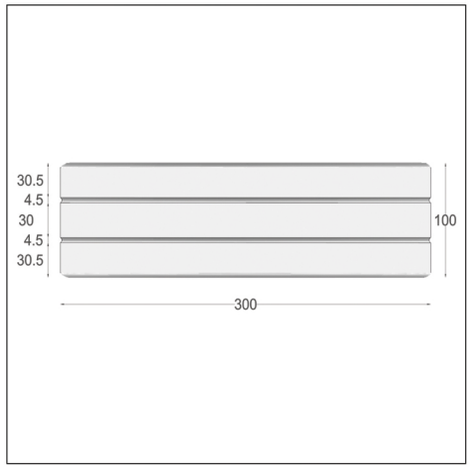

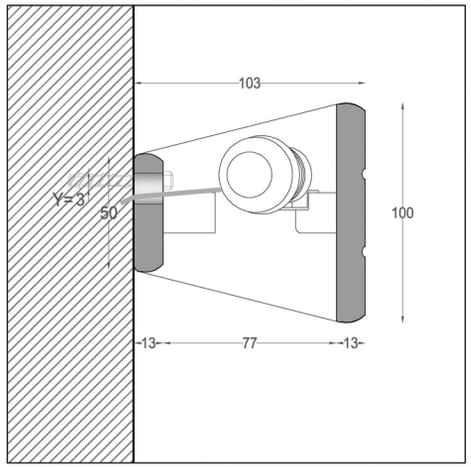

wall

Mounted Wall Lamp

Linear 01 code: 02.B.006

Finishes

Natural Plaster Finish

Dimensions / Weight

300x103x100mm / 1300gr/pc

Lamp Holder

E14

Lamp type / Max consumption / Voltage

E14 Led or Halogen / 46Watt / 220-240V

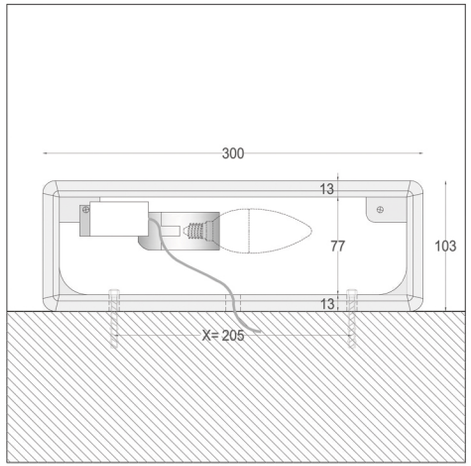

Features

IP 20

Copyright © 2016 NamaModular. All rights reserved

MADE IN GREECE

www.namamodular.com